SERVICE MANUAL

EN

DVXP Low Pressure Air Atomisation Hand Spray Gun - Pressure Fluid Feed

II 2 G X / Ex h II Gb X

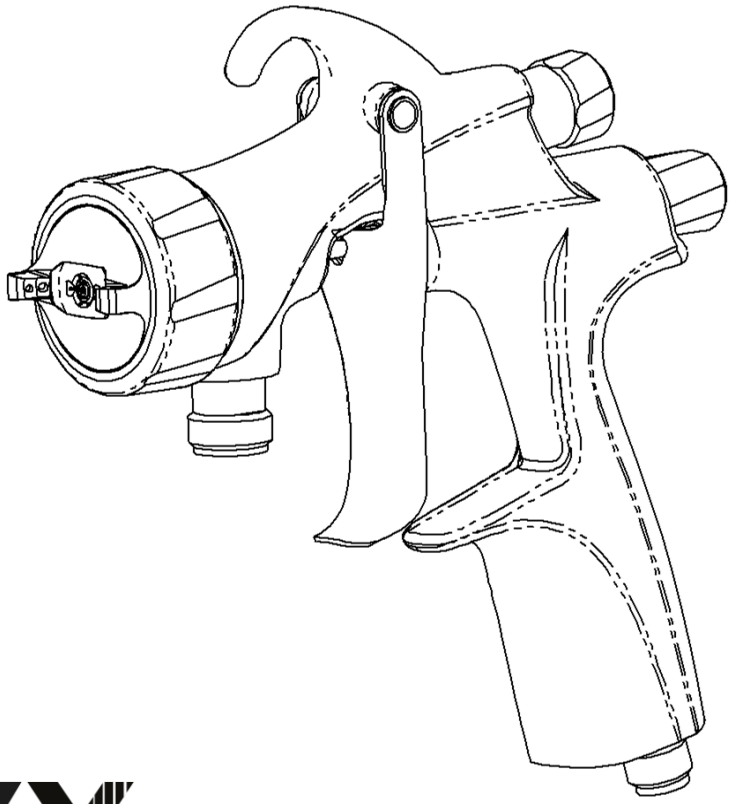

IMPORTANT! DO NOT DESTROY

It is the Customer's responsibility to have all operators and service personnel read and understand this manual.

Contact your local Binks representative for additional copies of this manual.

READ ALL INSTRUCTIONS BEFORE OPERATING THIS PRODUCT.

FUNCTIONAL DESCRIPTION

The DVX spray gun is a professional quality Air Atomising spray gun designed to comply with all global legislations. It is suitable for use with most paints and coatings supplied from a pressurised fluid suppy source.

SPECIFICATIONS

AIR INLET PRESSURES	
P1 = Max. Static Air Input Pressure	12 bar [175 psi]
P2 = Max. Fluid Input Pressure	15 bar [217 psi]
Gun Air Inlet Pressure with gun triggered	See Table 1 - Page 8
Vibration Level:	<2.5 m/s²
Sound Power Level:	Available On Request
Sound Pressure Level:	Available On Request

ENVIRONMENTAL	
Max. Ambient Operating Temperature	40°C Nominal [104°F]

MATERIALS OF CONSTRUCTION	
Gun Body Material	Anodised Aluminium
Fluid Tip, Fluid Needle and Trigger Stud	Stainless Steel
Air Cap Material	Electroless Nickel Plated Brass
Retaining Ring, Sprayhead, Adjusting Knobs, Air Valve Cage	Anodised Aluminium
Springs, Clips, Screws	Stainless Steel
Seals and O-Rings	Solvent Resistant
Trigger	Chrome Plated Steel
Valve Bodies, Rear Housing, Packing Nut	Electroless Nickel Plated Brass
Air Valve Stem	Electroless Nickel Plated Brass

CONNECTIONS	
P1 = Air Inlet Size	1/4" Universal
P2 = Fluid Inlet Size	3/8" BSP

WEIGHT	
GUN ONLY	510g [17.9 oz]

DIMENSIONS	
L x H x W mm [inches]	161 x 166 x 44 [6.3 x 6.5 x 1.7 in]

Product Description / Object of Declaration:	**DVXP**
This Product is designed for use with:	**Solvent & Waterbased Materials**
Suitable for use in hazardous area:	**Zone 1/Zone 2**
Protection Level:	**II 2 G X/Ex h II Gb X**
Notified body details and role:	**Element Materials Technology Rotterdam B.V. (2812)** **Lodging of ATEX Technical file**
This Declaration of Conformity / Incorporation is issued under the sole responsibility of the manufacturer:	**Binks U.K. Limited, Ringwood Road, Bournemouth, BH11 9LH. UK**
Representative authorised to compile the technical file	**President @. Binks France SAS 5 Place Pierre Semard, 94130 Nogent sur Marne , Paris, France**

EU Declaration of Conformity

This Declaration of Conformity / Incorporation is issued under the sole responsibility of the manufacturer:

Machinery Directive 2006/42/EC
ATEX Directive 2014/34/EU
by complying with the following statutory documents and harmonised standards:
EN ISO 12100:2010 Safety of Machinery - General Principles for Design
BS EN 1953:2013 Atomizing and spraying equipment for coating materials - Safety requirements
EN ISO 80079-36:2016 Explosive Atmospheres- Part 36:Non Electrical equipment for explosive atmospheres-Basic methods and requirements.
EN ISO 80079-37:2016 Explosive Atmospheres- Part 37: Non Electrical equipment for explosive atmospheres - protection by methods "c", "b" and "k".
EN 1127-1:2019 Explosive atmospheres - Explosion prevention - Basic concepts
HVLP and High Efficiency products comply with the requirements of PG6 from the EPA guidelines and offer greater than 65% transfer efficiency.
High volume, low pressure (HVLP) sprayguns are designed to reduce overspray and provide maximum transfer efficiency by limiting air cap pressure to 0.69 bar (10 psi) (complies with rules issued by SCAQMD and other authorities).

Providing all conditions of safe use / installation stated within the product manuals have been complied with and also installed in accordance with any applicable local codes of practice.

Signed for and on behalf of
Binks U.K. Ltd:

Document Part No.
EN

F. A. Sutter

15/04/25

Executive President: Engineering and Operations, Shoreview, MN, 55126. USA

Product Description / Object of Declaration:	**DVXP**
This Product is designed for use with:	**Solvent & Waterbased Materials**
Suitable for use in hazardous area:	**Zone 1/Zone 2**
Protection Level:	**II 2 G X/Ex h II Gb X**
Approved body details and role:	**Element Materials Technology Warwick Ltd. UK. (0891)** **Lodging of UKEX Technical file**
This Declaration of Conformity / Incorporation is issued under the sole responsibility of the manufacturer:	**Binks U.K. Limited,** **Ringwood Road,** **Bournemouth, BH11 9LH. UK**

UKCA Declaration of Conformity

This Declaration of Conformity / Incorporation is issued under the sole responsibility of the manufacturer:

Supply of Machinery (Safety) Regulations 2008
Equipment and Protective Systems Intended for use in Potentially Explosive Atmospheres Regulations 2016
by complying with the following statutory documents and designated standards:
BS EN ISO 12100:2010 Safety of Machinery - General Principles for Design
BS EN 1953:2013 Atomizing and spraying equipment for coating materials - Safety requirements
BS EN ISO 80079-36:2016 Explosive Atmospheres- Part 36:Non Electrical equipment for explosive atmospheres-Basic methods and requirements.
BS EN ISO 80079-37:2016 Explosive Atmospheres- Part 37: Non Electrical equipment for explosive atmospheres - protection by methods "c", "b" and "k".
BS EN 1127-1:2019 Explosive atmospheres - Explosion prevention - Basic concepts
HVLP and High Efficiency products comply with the requirements of PG6 from the EPA guidelines and offer greater than 65% transfer efficiency.
High volume, low pressure (HVLP) sprayguns are designed to reduce overspray and provide maximum transfer efficiency by limiting air cap pressure to 0.69 bar (10 psi) (complies with rules issued by SCAQMD and other authorities).

Providing all conditions of safe use / installation stated within the product manuals have been complied with and also installed in accordance with any applicable local codes of practice.

Signed for and on behalf of Binks U.K. Ltd:

Document Part No.
EN

F. A. Sutter

15/04/2025

Executive President: Engineering and Operations, Shoreview, MN, 55126. USA

In this part sheet, the words WARNING, CAUTION and NOTE are used to emphasise important safety information as follows:

EN

⚠ WARNING	⚠ CAUTION	NOTE
Hazards or unsafe practices which could result in severe personal injury, death or substantial property damage.	Hazards or unsafe practices which could result in minor personal injury, product or property damage.	Important installation, operation or maintenance information.

⚠ WARNING

Read the following warnings before using this equipment.

SOLVENTS AND COATING MATERIALS. Can be highly flammable or combustible when sprayed. Always refer to the coating material supplier's instructions and safety sheets before using this equipment.

READ THE MANUAL. Before operating finishing equipment, read and understand all safety, operation and maintenance information provided in the operation manual. Users must comply with all local and national codes of practice and insurance company requirements governing ventilation, fire precautions, operation and house-keeping of working areas.

FIRE AND EXPLOSION HAZARD. Never use 1,1,1-Trichloroethane, Methylene Chloride, other Halogenated Hydrocarbon solvents or fluids containing such solvents in equipment with aluminium wetted parts. Such use could result in a serious chemical reaction, with the posibility of explosion. Consult your fluid suppliers to ensure that the fluids being used are compatible with aluminium parts.

STATIC CHARGE. Fluid may develop a static charge that must be dissipated through proper grounding of the equipment, objects to be sprayed and all other electrically conductive objects in the dispensing area. Improper grounding or sparks can cause a hazardous condition and result in fire, explosion or elecrtic shock and other serious injury.

TOXIC VAPOURS. When sprayed, certain materials may be poisonous, create irritation, or are otherwise harmful to health. Always read all labels, safety sheets and follow any recommendations for the material before spraying. If in doubt contact your material supplier.

LOCK OUT / TAG-OUT. Failure to de-energise, disconnect, lock out and tag-out all power sources before performing equipment maintenance could cause serious injury or death.

NOISE LEVELS. The A-weighted sound level of pumping and spray equipment may exceed 85 dB(A) depending on equipment settings. Actual noise levels are available on request. It is recommended that ear protection is worn at all times while equipment is in use.

HIGH PRESSURE CONSIDERATION. High pressure can cause serious injury. Relieve all pressure before servicing. Spray from the gun, hose leaks or ruptured components can inject fluid into your body and cause extremely serious injury.

INSPECT THE EQUIPMENT DAILY. Inspect the equipment for worn or broken parts on a daily basis. Do not operate the equipment if you are uncertain about its condition.

EQUIPMENT MISUSE HAZARD. Equipment misuse can cause the equipment to rupture, malfunction or start unexpectedly and result in serious injury.

GLOVES. Must be worn when spraying or cleaning the equipment.

WEAR SAFETY GLASSES. Failure to wear safety glasses with side shields could result in serious eye injury or blindness.

WEAR RESPIRATOR. The use of respiratory protective equipment is recommended at all times. The type of equipment must be compatible with the material being sprayed.

NEVER MODIFY THE EQUIPMENT. Do not modify the equipment unless the manufacturer provides written approval.

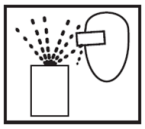

PROJECTILE HAZARD. You may be injured by venting liquids or gases that are released under pressure, or flying debris.

PRESSURE RELIEF PROCEDURE. Always follow the pressure relief procedure in the equipment instruction manual.

KNOW WHERE AND HOW TO SHUT OFF THE EQUIPMENT IN CASE OF AN EMERGENCY.

OPERATOR TRAINING. All personnel must be trained before operating finishing equipment.

IT IS THE RESPONSIBILITY OF THE EMPLOYER TO PROVIDE THIS INFORMATION TO THE OPERATOR OF THE EQUIPMENT.

EXPLODED VIEW

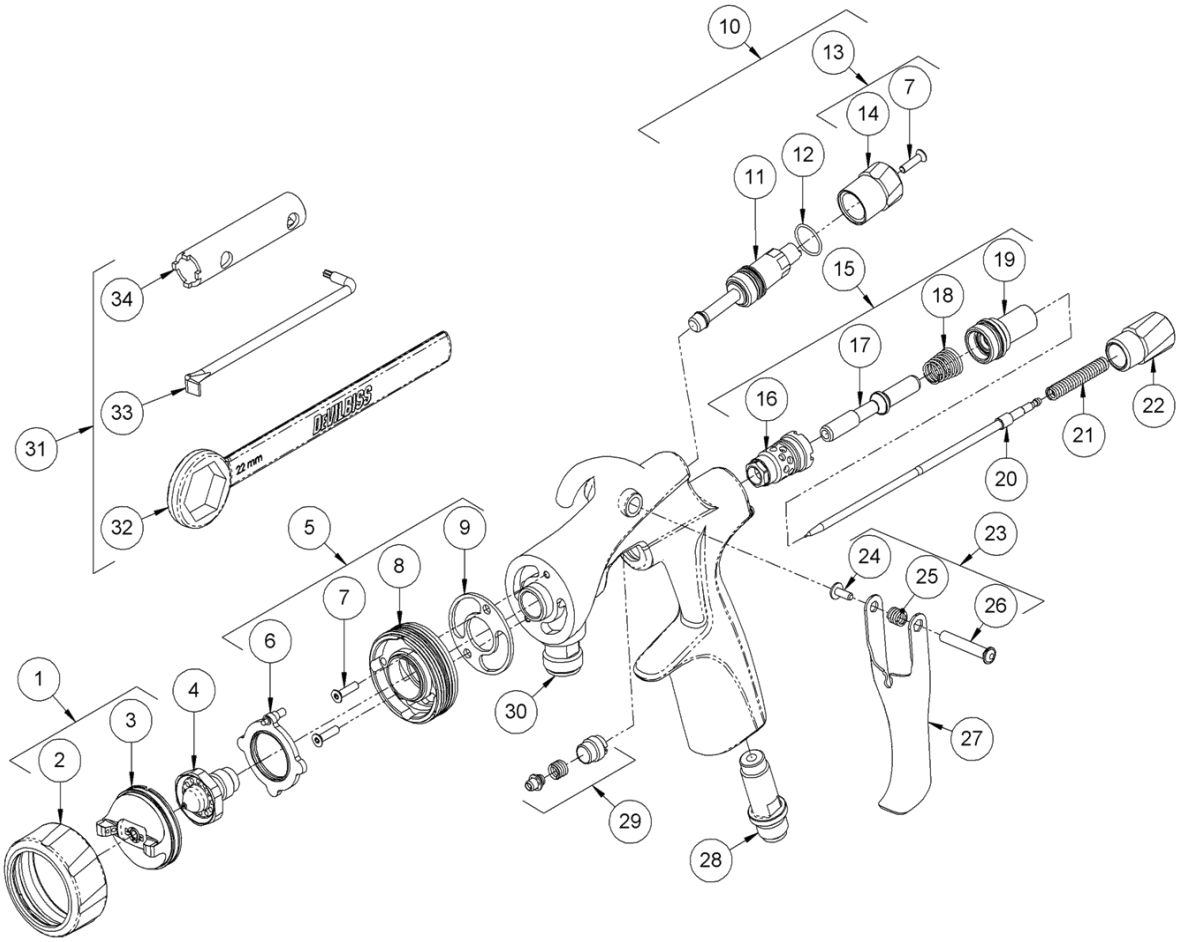

PARTS LIST

REF.	PART No.	DESCRIPTION	QTY.
1	SEE TABLE 1	AIR CAP & RETAINING RING	1
2	DVXK-400	RETAINING RING SUB ASSEMBLY	1
3	-	AIR CAP	1
4	SEE TABLE 2	FLUID NOZZLE	1
5 +	DVXK-401	SPRAY HEAD KIT	1
6	DVXK-402	INDEXING BAFFLE PLATE	1
7 #	704403	SCREW (KIT OF 3)	1
8	-	SPRAYHEAD	1
9	704401	GASKET (KIT OF 2)	1

PARTS LIST (Continued)

REF.	PART No.	DESCRIPTION	QTY.
10 +	DVXK-403	FAN CONTROL VALVE	1
11	-	VALVE BODY	1
12 #	-	O RING	1
13	DVXK-404	SPREADER KNOB KIT	1
14	-	SPREADER VALVE ADJUSTING KNOB	1
15 +	DVXK-405	AIR VALVE ASSEMBLY	1
16	-	FRONT CAGE ASSEMBLY	1
17	-	AIR VALVE STEM	1
18 #	-	AIR VALVE SPRING	1
19	-	REAR SEAL ASSEMBLY	1
20	SEE TABLE 2	FLUID NEEDLE	1
21 #	704405	NEEDLE SPRING	
22	DVXK-406	FLUID ADJUSTING KNOB	1
23	704406	TRIGGER, STUD, SPRING & SCREW KIT	1
24 #	-	TRIGGER SCREW	1
25 #	-	SPRING	1
26 #	-	TRIGGER STUD	1
27	-	TRIGGER	1
28	DVXK-407	AIR INLET	1
29 +	702731	PACKING, SPRING & PACKING NUT KIT	1
30 ~	-	FLUID INLET	1
31	704429	TOOL KIT	1
32	-	TIP WRENCH	1
33	-	TORX DRIVER	1
34	-	VALVE TOOL	1

~ NOT REPLACEABLE

SERVICE PARTS

DVXK-408	MINOR SERVICE KIT	INCLUDES ITEMS MARKED #
DVXK-409	MAJOR SERVICE KIT	INCLUDES ITEMS MARKED +

AIR CAP AND FLUID NOZZLE/NEEDLE SELECTION GUIDE

TABLE 1 - DVXP AIR CAP PERFORMANCE GUIDE					
Part Number	Air Cap & Type		***Recommended Air Inlet Pressure	Air Consumption	Typical Fan Pattern Size**
DVXP-130-P1-K	P1	HVLP PLUS	2.0 bar [29 psi]	250 L/min [8.8 scfm]	330 mm [13 in]
DVXP-130-P2-K	P2	HVLP PLUS	2.0 bar [29 psi]	315 L/min [11.1 scfm]	350 mm [13.75 in]
DVXP-130-P3-K	P3	HVLP PLUS	2.0 bar [29 psi]	325 L/min [11.4 scfm]	380 mm [15 in]

** Fan pattern size @ 200mm [8"] distance.

*** (with gun fully triggered)

TABLE 2 - DVXP AIR CAP - FLUID NOZZLE - NEEDLE COMBINATIONS							
Air Cap			Fluid Nozzle			Needle	
P1	P2	P3	Part Number	Fluid Nozzle Size	Marking	Part Number	Marking
✓	-	-	DVXP-230-08-K	0.8	DVXP-0.8	DVXP-330-08-10-12-K DVXP-330P-08-10-12-K	DVXP-330-08-10-12 DVXP-330P-08-10-12
✓	✓	-	DVXP-230-10-K	1.0	DVXP-1.0		
-	✓	-	DVXP-230-12-K	1.2	DVXP-1.2		
-	✓	-	DVXP-230-14-K	1.4	DVXP-1.4	DVXP-330-14-16-17-K DVXP-330P-14-16-17-K	DVXP-330-14-16-17 DVXP-330P-14-16-17
-	✓	-	DVXP-230-16-K	1.6	DVXP-1.6		
-	-	✓	DVXP-231-17-K	1.7	DVXP-1.7		
-	-	✓	DVXP-231-18-K	1.8	DVXP-1.8	DVXP-330-18-20-K DVXP-330P-18-20-K	DVXP-330-18-20 DVXP-330P-18-20
-	-	✓	DVXP-231-20-K	2.0	DVXP-2.0		
✓	-	-	DVXP-230N-08-K	0.8N	DVXP-0.8N	DVXP-330N-08-10-12-K	DVXP-330N-08-10-12
✓	✓	-	DVXP-230N-10-K	1.0N	DVXP-1.0N		
-	✓	-	DVXP-230N-12-K	1.2N	DVXP-1.2N		
-	✓	-	DVXP-230N-14-K	1.4N	DVXP-1.4N	DVXP-330N-14-16-17-K	DVXP-330N-14-16-17
-	✓	-	DVXP-230N-16-K	1.6N	DVXP-1.6N		
-	-	✓	DVXP-231N-17-K	1.7N	DVXP-1.7N		
-	-	✓	DVXP-231N-18-K	1.8N	DVXP-1.8N	DVXP-330N-18-20-K	DVXP-330N-18-20
-	-	✓	DVXP-231N-20-K	2.0N	DVXP-2.0N		

N - Nitride Coated

DVXP-330P-##-## Plastic Tipped Needle

⚠ CAUTION

IMPORTANT: This spraygun is suitable for use with both waterbased and solvent based coating materials.

- The gun is not designed for use with highly corrosive and/or abrasive materials.

- Immersion of parts in aggressive cleaning solutions can cause colour fading and/or component degredation. Always wash in neutral cleaning solution (pH 6 to 8). Do not submerge the gun in cleaning liquid.

- The gun and its components are not designed to be cleaned using an ultrasonic bath.

If there is any doubt regarding the suitability of a specific material, contact your Binks Distributor or Binks direct.

START-UP SEQUENCE

1. Connect the gun to a clean, moisture and oil free air supply using a conductive hose of at least 8mm I.D.

2. Mix coating material to Manufacturer's instructions and filter material.

3. Connect the fluid supply hose to fluid inlet connector.

4. Turn fan control valve adjusting knob (14) counter clockwise to fully open.

5. Turn handle air flow valve counter clockwise to fully open (if fitted).

6. Adjust inlet air regulator pressure if required.

7. Turn fluid adjusting knob counter clockwise until fully open (see digram on page 11)

8. Hold gun perpendicular to surface being sprayed at a distace of 150-200mm [6-8"]. Arcing or tilting may result in uneven coating thickness.

9. Test spray. If the finish is too dry, reduce airflow by reducing air inlet pressure.

10. If finish is too wet, reduce fluid flow by turning fluid adjusting knob (22) clockwise. If atomisation is too coarse, increase air inlet pressure. If too fine, reduce inlet pressure.

11. The pattern size can be reduced by turning the fan control valve (14) clockwise.

12. Spray component edges first. Overlap each stroke a minimum of 60-75%. Move gun at a constant speed.

13. Adjust fan size, fluid flow and air pressure if required to optimise application.

NOTE

Depending on hose length, larger I.D. hose may be required. Install an air gauge at the gun handle. When gun is triggered on, adjust regulated pressure as required. Do not use more pressure than is necesarry to atomise the material being applied. Excess pressure will create additional overspray and reduce transfer efficiency.

NOTE

If quick connect couplings are required, use only high flow quick connects. Other types will not flow enough air for correct gun operation.

SPRAY GUN CLEANING

To clean air cap and fluid tip, brush exterior with a stiff bristle brush. If necesarry to clean cap holes, use a broom straw or toothpick if possible. If a wire or hard instrument is used, extreme care must be taken to prevent scratching or burring of the holes which will cause a distorted spray pattern.

To clean the spray gun exterior, brush and wipe, depending upon the complexity of the area.

To clean fluid passages, flush with a suitable cleaning liquid. Use of an air/liquid scrubbing system is recommended for rapid and effective cleaning. Partial dissassembly will aid easy access to critical areas. Completely dry inside and outside before storage.

Use solvent or cleaning liquid compatible with and designed for the coating sprayed. This will increase ease of cleaning and decrease the time needed. Never completely immerse in any solvent or cleaning solutions as this is detrimental to the lubricants and life of the spray gun.

⚠ WARNING

The spray gun must be earthed to dissipate any electrostatic charges which may be created by fluid or air flows. This can be achieved through the spray gun mounting, or conductive air/fluid hoses. Electrical bond from the spray gun to earth should be checked and a resistance of less than 10^6 Ohms is required.

SPRAY GUN DISASSEMBLY / ASSEMBLY

KEY	
#	Order for disassembly *(reverse for assembly)*

DISASSEMBLY TIP & NEEDLE

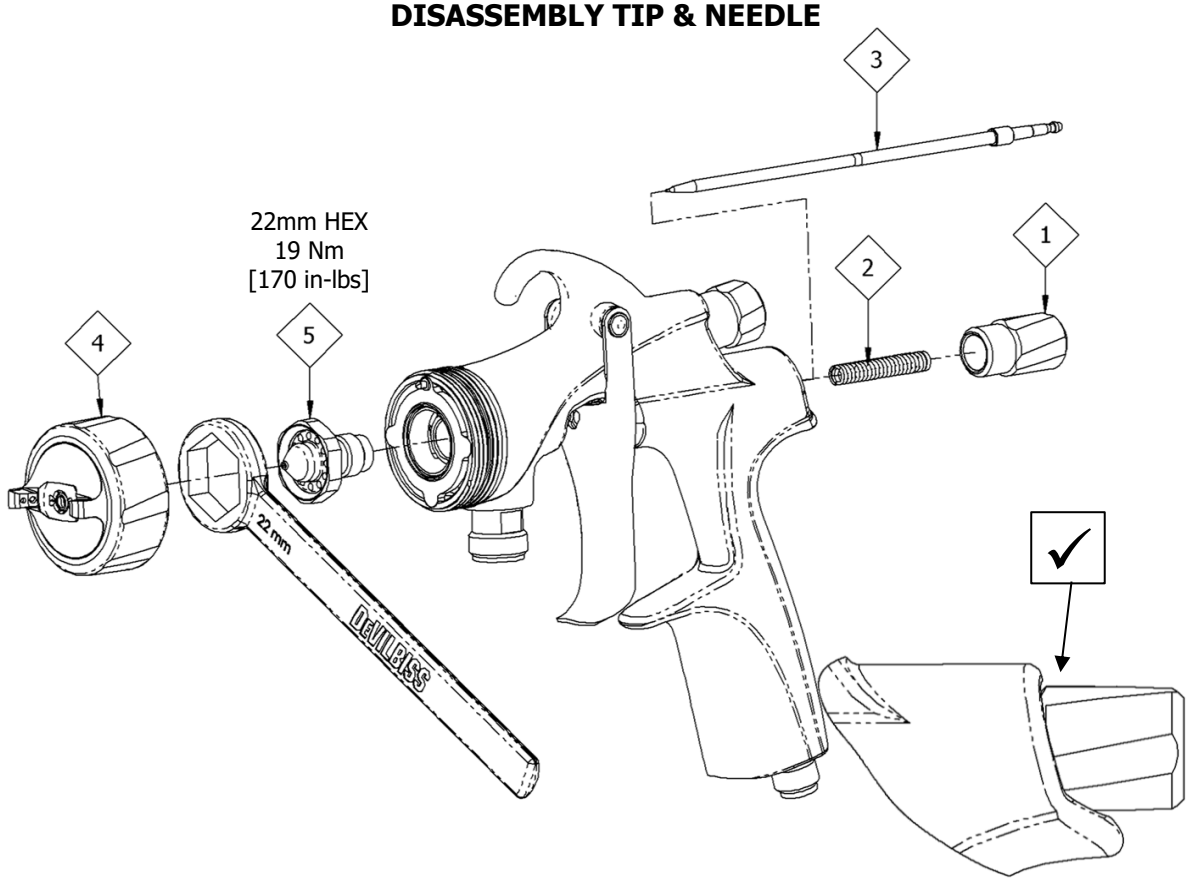

NOTE
When changing the fluid tip or fluid needle, replace tip, needle and fluid packing at the same time. Using worn parts can cause fluid leakage. Do not overtighten.

NOTE
When removing the air cap from the retaining ring, take care not damage any plastic components also inside the ring. They are not available as separate spare parts Simply wipe parts clean and reassemble with new or clean air cap.

AIR CAP DISASSEMBLY AND ASSEMBLY

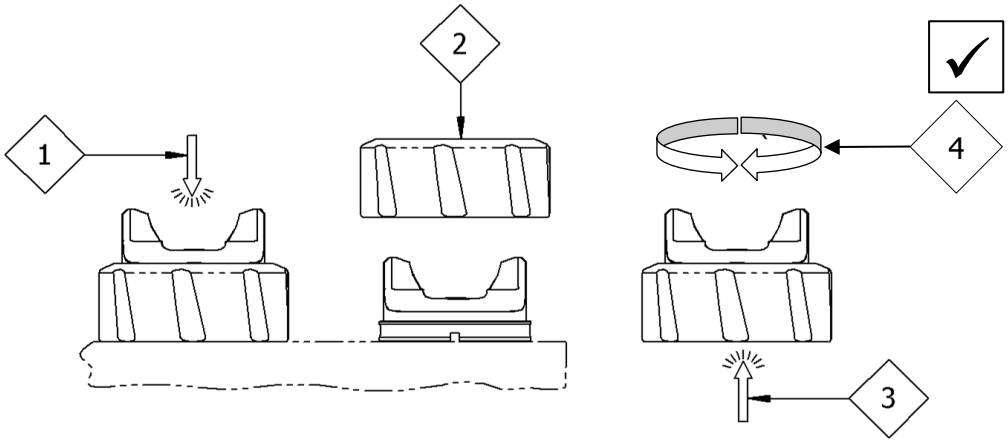

AIR CAP INDEXING

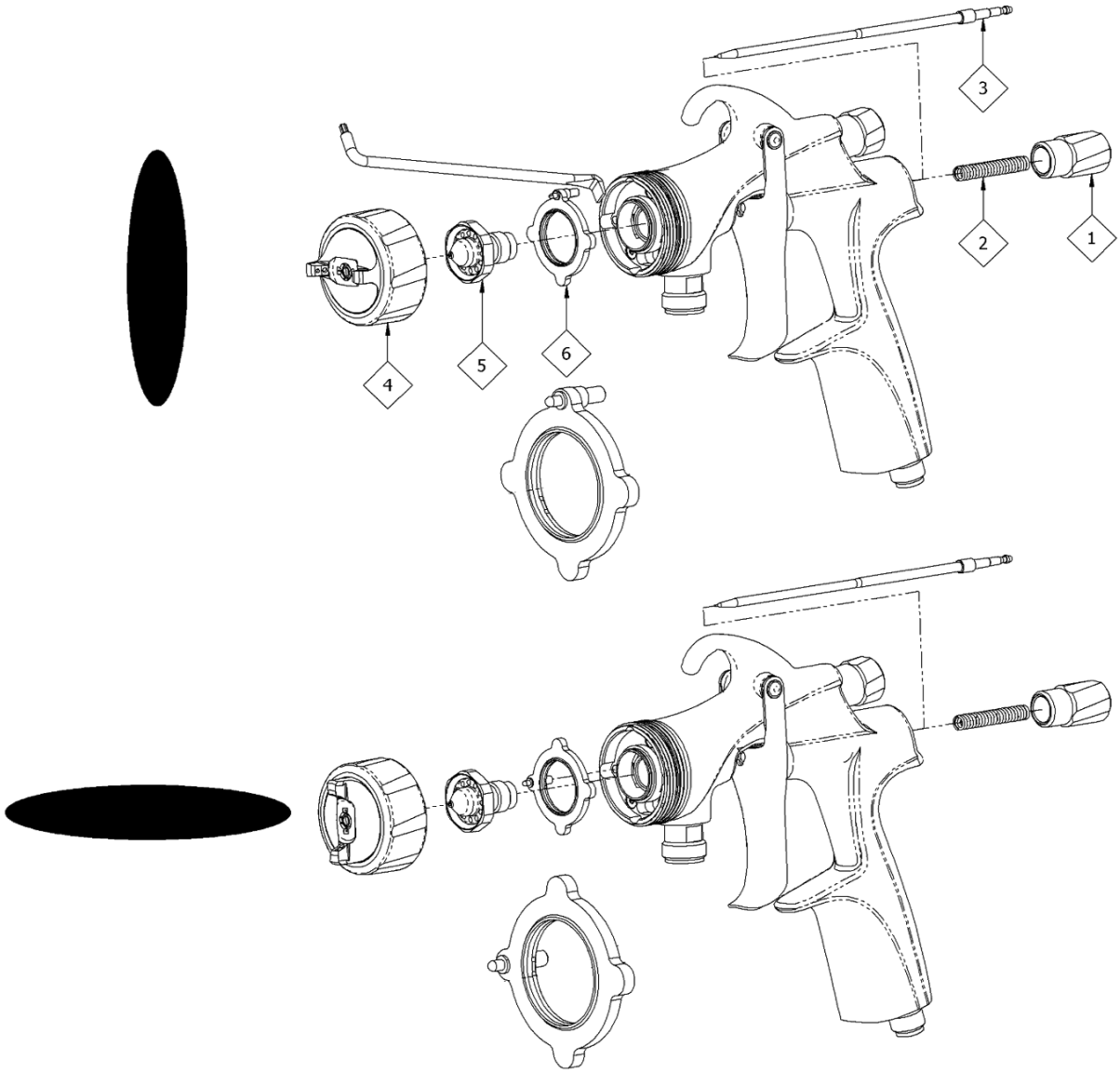

DISASSEMBLY PACKING

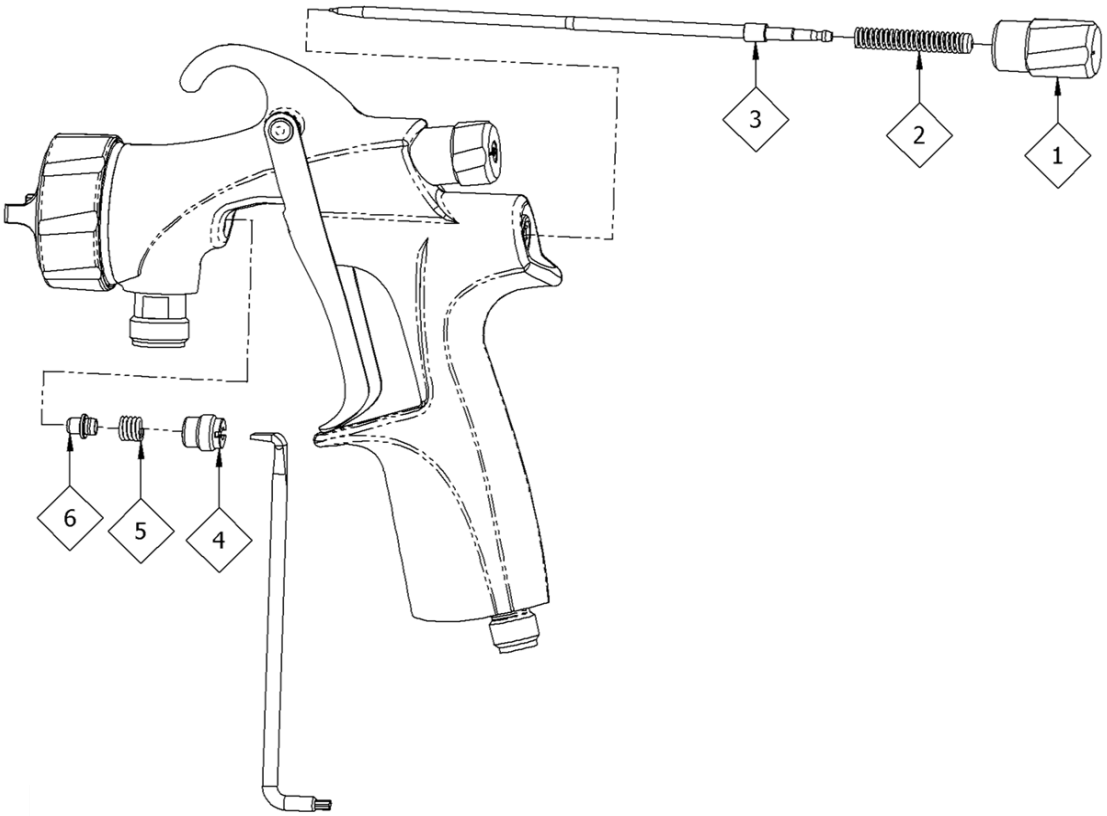

DISASSEMBLY TRIGGER

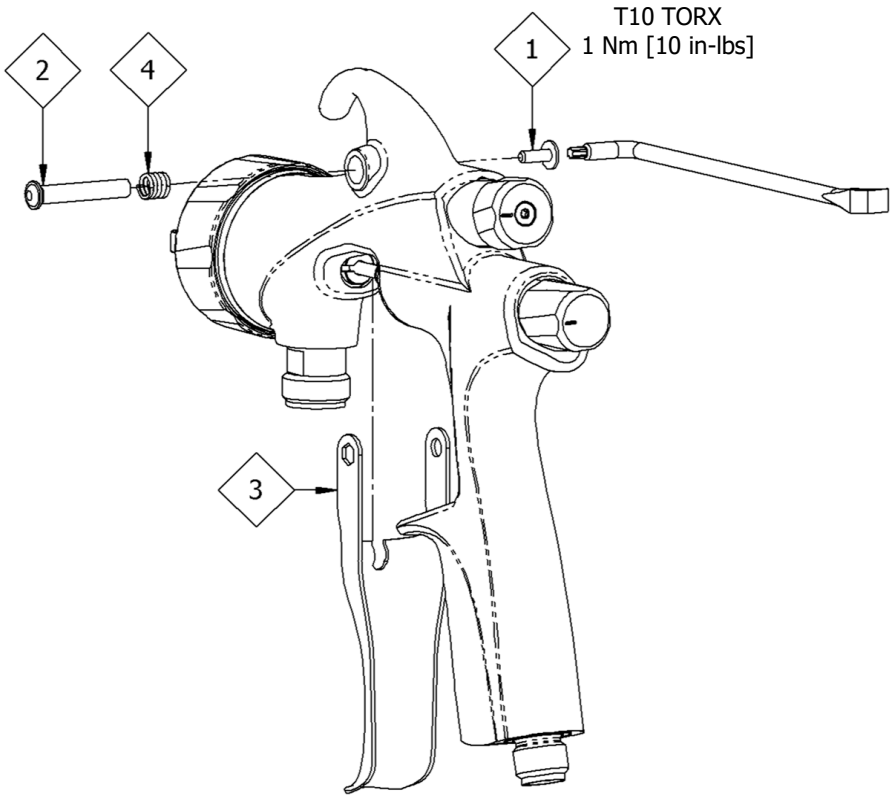

DISASSEMBLY SPRAYHEAD

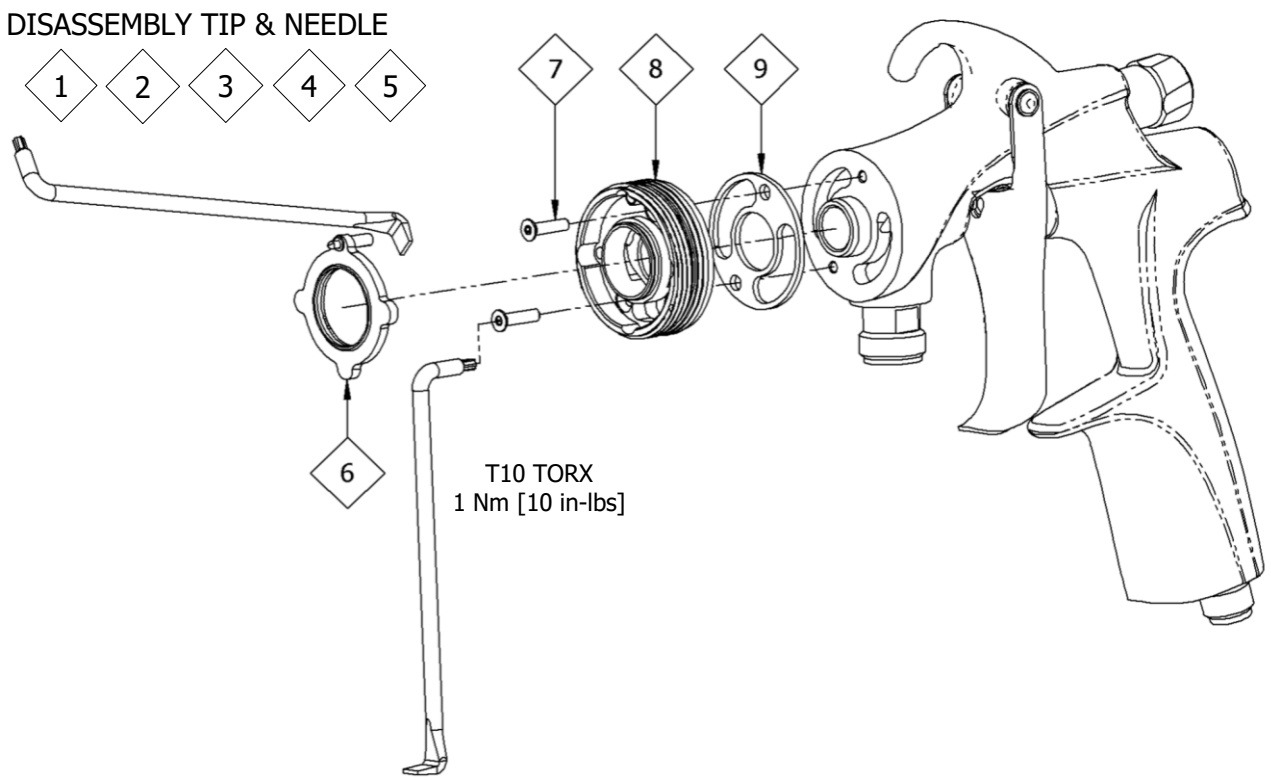

DISASSEMBLY AIR INLET

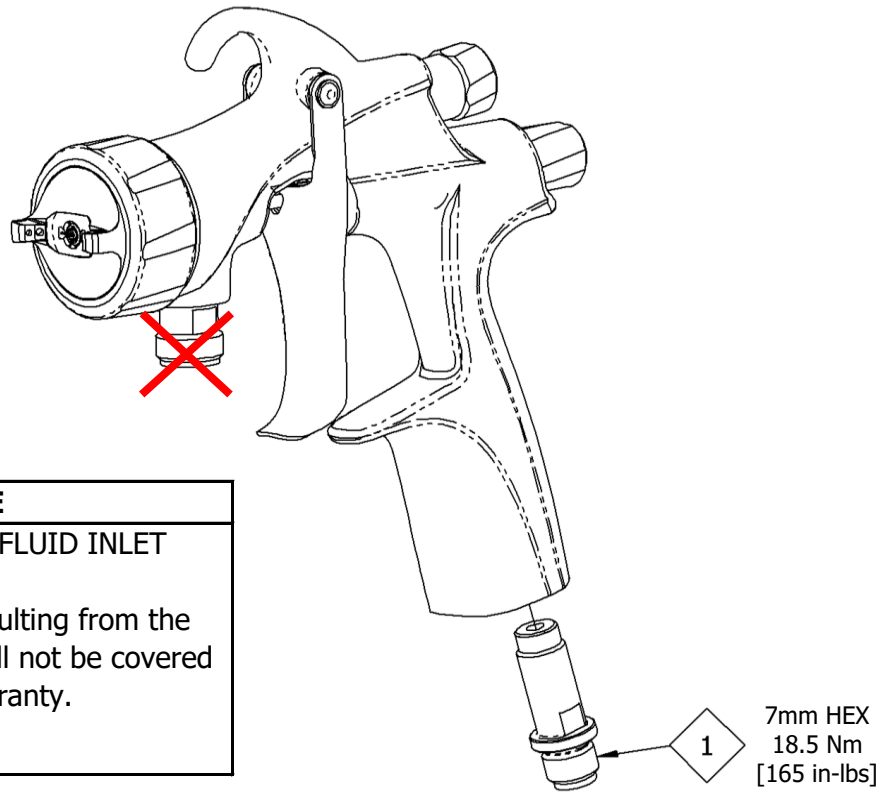

NOTE
DO NOT REMOVE FLUID INLET Any malfunctions resulting from the removal of this part will not be covered by the Warranty.

DISASSEMBLY AIR VALVE

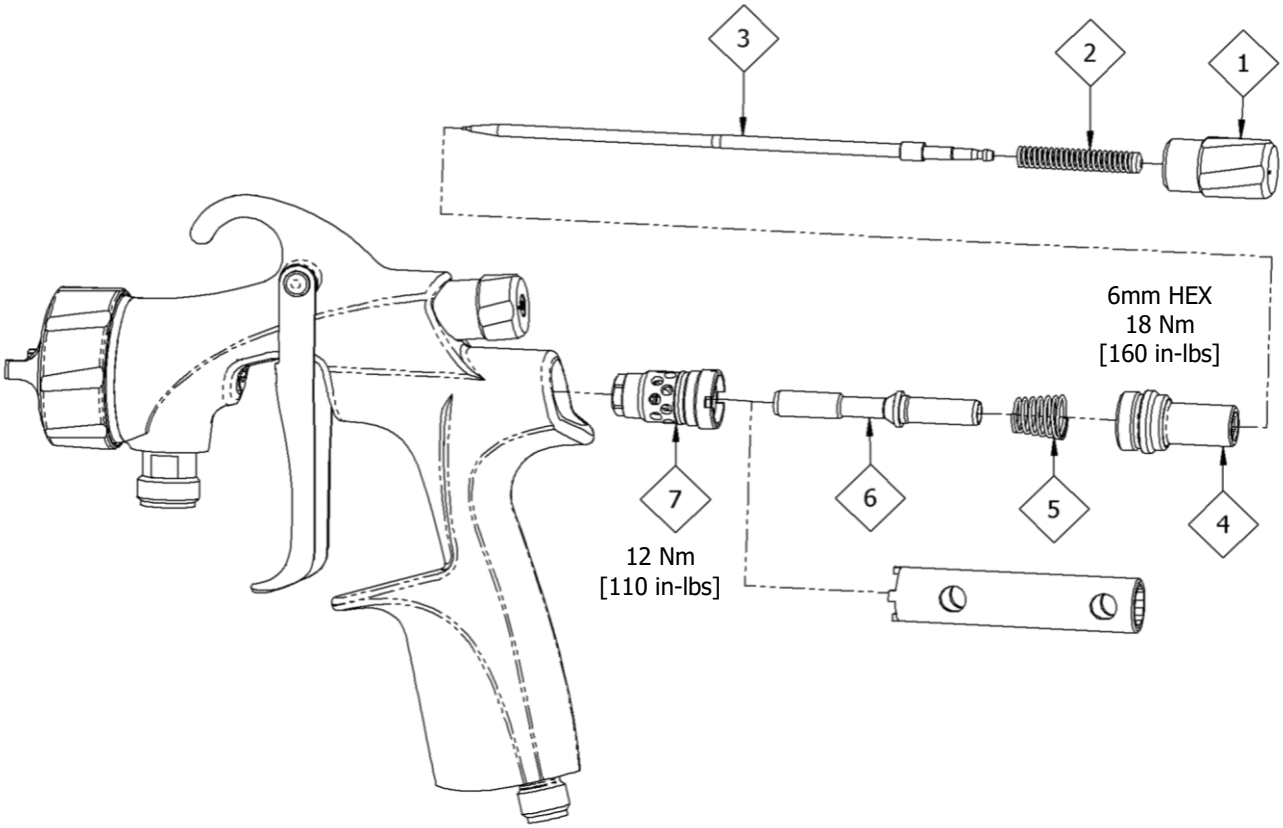

SPREADER VALVE REPLACEMENT

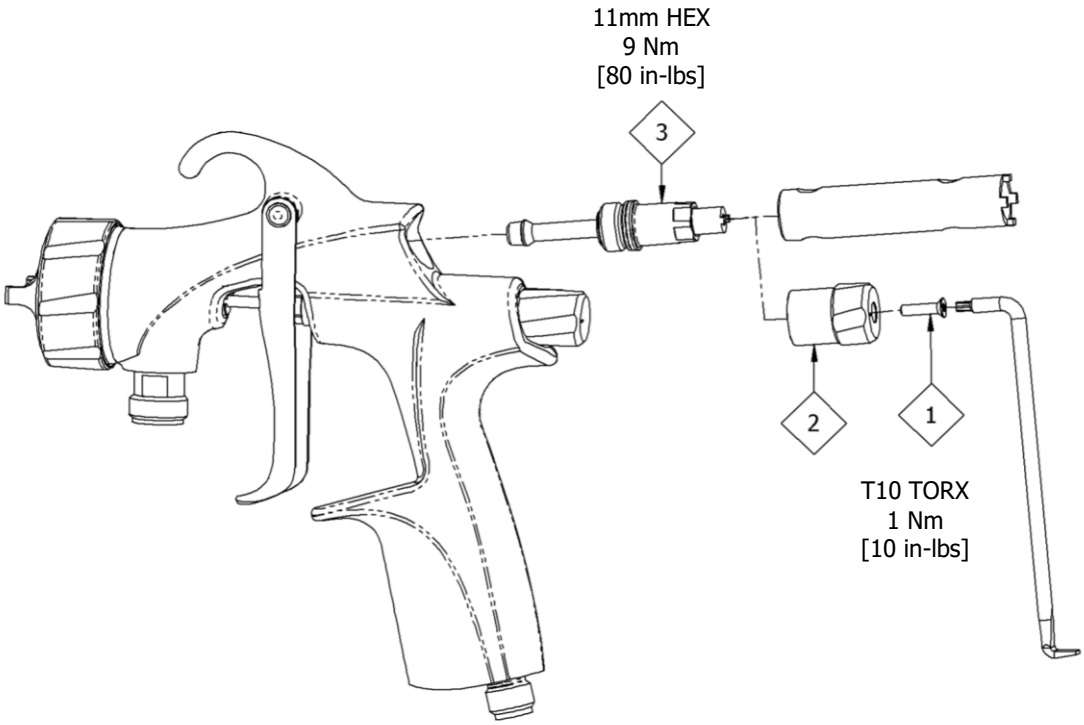

TROUBLESHOOTING MECHANICAL PERFORMANCE

GENERAL FAULTS	CAUSE	CORRECTION
Will not spray.	No air pressure at gun.	Check air supply and hose. Check handle air flow valve is open (if fitted)
	Fluid needle adjustment not open enough.	Open fluid needle by rotating needle knob counter-clockwise
Gun spits paint when triggering on and off.	Incorrect needle fitted to gun.	Check fluid nozzle/needle selection chart and fit correct item.
	Excessive needle wear.	Replace with new needle.
	Excessive fluid nozzle wear.	Replace with new fluid nozzle
Gun spits paint when triggering on due to paint build-up inside air cap between spraying operations.	Fluid nozzle not fitted correctly in gun head.	Check nozzle and head sealing surfaces for damage and/or tighten
	Fluid nozzle/needle leakage.	Check for damage or blockage.
Paint build-up on fluid nozzle	Fluid nozzle not fitted correctly in gun head.	Check nozzle and head sealing surfaces for damage and/or tighten
	Fluid nozzle/needle leakage.	Check for damage or blockage.
Paint build-up on air cap exterior	Damaged air cap holes.	Replace with new air cap.
	Gradual build-up of bounce-back on gun head.	Thoroughly clean air cap & check booth air flow
Unable to get round spray	Fluid nozzle or sprayhead incorrectly fitted.	Remove, check components for damage and refit correctly.

When removing the air cap from the retaining ring, take care not damage any plastic components also inside the ring. Simply wipe parts clean and reassemble with a new or clean air cap.

FLUID FAULTS	CAUSE	CORRECTION
Slow fluid leak from fluid nozzle and needle seat.	Fluid nozzle internal seat scored damaged or worn.	Replace.
	Fluid needle external profile damaged or worn.	
	Contamination on needle or nozzle mating surfaces preventing good seal.	Thoroughly clean.
	Incorrect fluid nozzle for fluid needle fitted to gun.	Check nozzle/needle selection chart and fit correct item.
	Slow needle movement.	Remove and clean or replace Needle Packing. Check Needle spring for damage or breaking.
Major fluid leak or fluid jetting from fluid nozzle and needle seat.	Contamination on needle or nozzle mating surfaces preventing good seal.	Remove nozzle and needle and thoroughly clean.
	Incorrect fluid nozzle for fluid needle fitted to gun.	Check nozzle/needle selection chart and fit correct item.
Slow fluid leak from needle packing.	Fluid needle packing worn or incorrectly fitted.	Replace.

AIR FAULTS	CAUSE	CORRECTION
Small air leak from air cap when gun is not triggered.	Air Valve Stem contaminated and not correctly seating.	Remove Air Valve Stem and thoroughly clean valve shaft and seating surfaces.
	Air Valve Stem seal inside Front Cage Assembly damaged.	Replace.

TROUBLESHOOTING SPRAY PERFORMANCE

CONDITION	CAUSE	CORRECTION
Heavy top or bottom pattern. 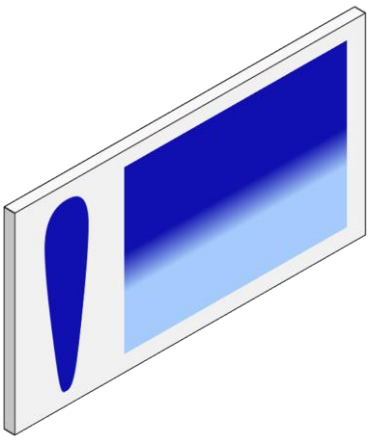	Contamination build-up on air cap, plugged horn holes, centre holes or jets.	Soak cap or nozzle in suitable cleaning liquid and thoroughly clean.
	Contamination build-up on fluid nozzle exterior or partially plugged fluid tip.	Soak cap or nozzle in suitable cleaning liquid and thoroughly clean.
	Fluid nozzle or cap dirty or damaged.	Replace fluid nozzle or air cap if necessary.
Heavy right or left side pattern. 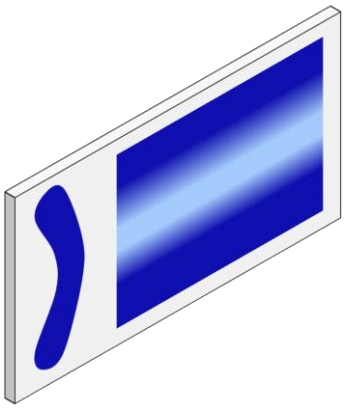	Left or right side holes plugged.	Soak cap or nozzle in suitable cleaning liquid and thoroughly clean.
	Dirt or damage on left or right side of fluid nozzle exterior.	Replace fluid nozzle or air cap if necessary.
Checking procedure for top-heavy, bottom-heavy, right-heavy and left-heavy spray patterns.		

Determine if the obstruction is on the air cap or the fluid nozzle. Do this by making a test spray pattern, then rotate the cap one-half turn and spray another pattern.

If the defect is inverted, obstruction is on the air cap. Clean the air cap as previously instructed and also check for dried paint just inside the cap centre hole opening, remove by washing with a suitable cleaning liquid..

If the defect is not inverted, it is on the fluid nozzle. Clean nozzle. If problem persists, renew nozzle.

Also check for damage to critical air cap and fluid nozzle surfaces and all hole edges.

Heavy centre pattern. 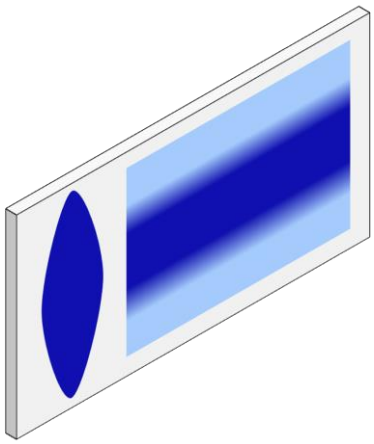	Pattern adjustment valve set too low.	Turn out counter clockwise to achieve correct pattern.
	Too much coating	Reduce fluid flow by turning fluid needle adjusting screw clockwise. Reduce fluid pressure.
	Coating too thick.	Thin to correct viscosity
	Atomising air pressure too low.	Increase air pressure.
Intermittent or 'fluttering' spray fan. 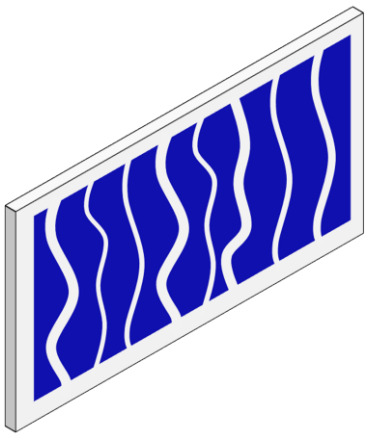	Loose fluid tip.	Tighten.
	Fluid nozzle not seated correctly in gun head.	Remove fluid nozzle, clean components, check cone seating on tip and gun for damage or contamination.
	Partially obstructed fluid passage or fluid hose.	Clean or replace.
Split spray pattern 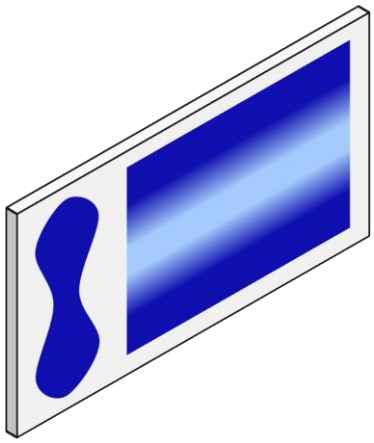	Not enough coating flow.	Increase fluid flow by changing fluid nozzle size, opening needle control knob or increase fluid pressure on pressure feed container.
	Too high horn pressure.	Reduce pattern / Horn air pressure
	Too much air for fluid quanitity used.	Reduce input air pressure.

Ball end heavy pattern. 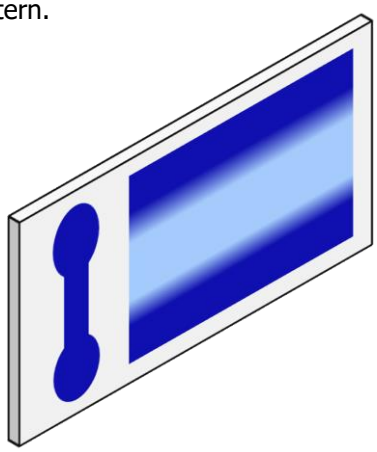	Too much fluid flow.	Reduce fluid flow. Change fluid tip for smaller size or change air cap for different specification air cap.
Excessive bounce-back.	Too much atomisation air pressure.	Reduce air pressure.
	Gun too far from surface.	Check distance (normally 150-200mm [6-8"]).
Runs and sags.	Too much fluid flow.	Adjust gun or reduce fluid pressure.
	Material viscosity too low.	Mix properly or apply light coats/reduce fluid flow.
	Gun tilted at an angle.	Hold gun at right angle to work.
Thin, sandy coarse finish drying before it flows out.	Gun too far from surface.	Check distance.
	Too much air pressure.	Reduce air pressure and check spray pattern.
	Fluid flow too low.	Increase fluid flow by changing fluid tip size, supply pressure or turning needle control knob counter clockwise.

ACCESSORIES

PART No.	DESCRIPTION	
DVXK-410	NON INDEXING BAFFLE PLATE	
704417	INLINE FLOW VALVE	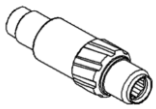

AIR CAP TEST KITS				
Part Number	Air Cap & Type		***Recommended Air Inlet Pressure	Atomisation Pressure
DVXK-P1T	P1	HVLP PLUS	2.0 bar [29 psi]	0.69 bar [10 psi)
DVXK-P2T	P2	HVLP PLUS	2.0 bar [29 psi]	0.69 bar [10 psi)
DVXK-P3T	P3	HVLP PLUS	2.0 bar [29 psi]	0.69 bar [10 psi)

*** (with gun fully triggered)

DIMENSIONS

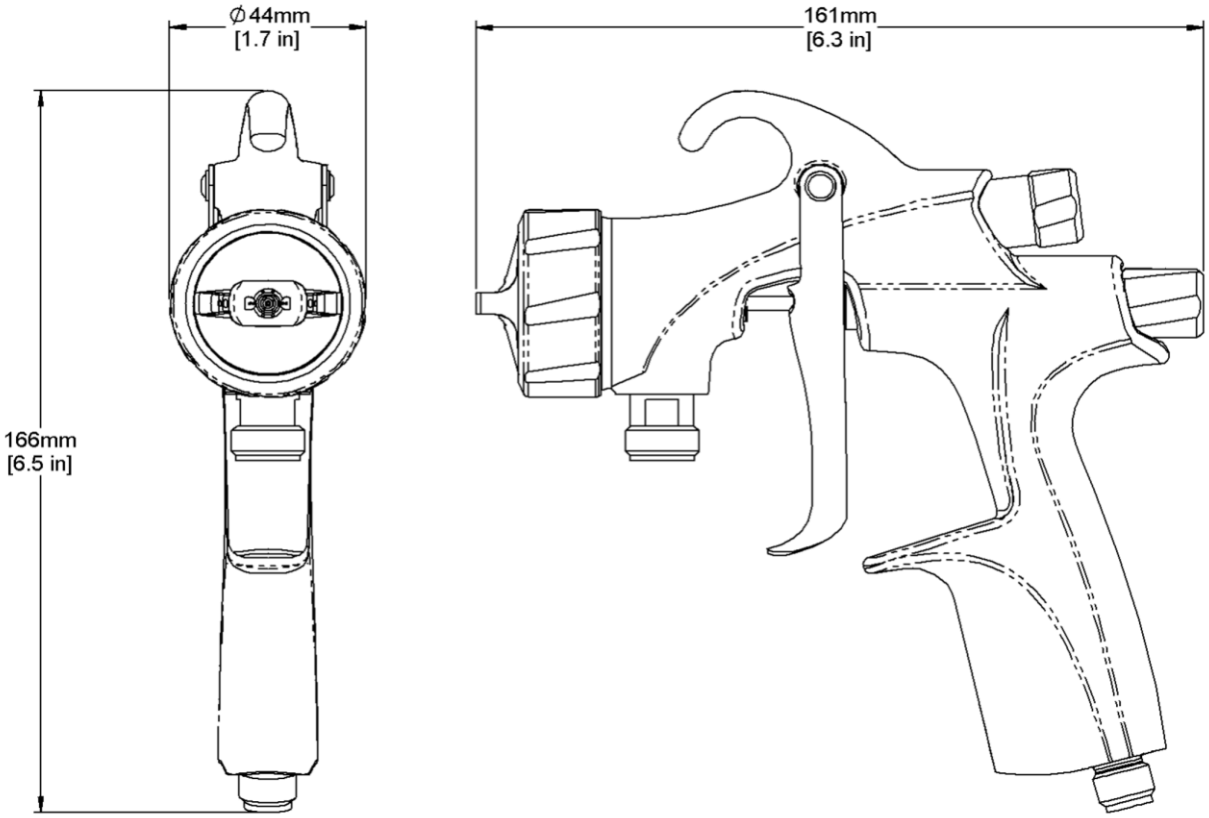

WARRANTY POLICY

This product is covered by Binks materials and workmanship limited warranty.

The use of any parts or accessories, from a source other than Binks, will void all warranties. Failure to reasonably follow any maintenance guidance provided, may invalidate any warranty.

For specific warranty information please contact Binks.

For technical assistance or to locate an authorised distributor, contact one of our international sales and customer support locations below.

REGION	BINKS CONTACT
Americas	Tel: 1-888-992-4657
Europe, Africa, Middle East	Tel: +44 (0)1202 571 111
India	marketingroa@binks.com
China	Tel: +8621-3373 0108
Korea	Tel: +82313663303
Japan	Tel: +81 45 785 6421
Australia	Tel: +61 (0) 2 8525 7555

WARRANTY PAGE

Binks

Binks is a global leader in innovative finishing technologies. Binks reserves the right to modify equipment specifications without prior notice.
Binks®, DeVilbiss®, and Ransburg® are registered trademarks of Binks US, LLC.

© 2025 Binks US, LLC. All rights reserved.